PosiVolt
1 -10V Dimmer Panel
User Manual

LED Lighting and Control
Designed and Manufactured in Australia

©2016 Digilin Australia.
Document Rev: 5.2 - 4 November 2016
Product specifications are subject to change without notice.

DIGILIN

Table Of Contents

Safety Notes 2
Introduction 2
Specifications 2
Physical 2
Inputs 2
Outputs 2
Installation 3
Maximum Load 3
Operation 3
Wiring Diagram 4

Safety Notes

- Install in a dry sheltered position
- Interior use only
- Installation should only be performed by a qualified professional
- Install in accordance with all appropriate wiring standards

Introduction

The PosiVolt provides a simple means to smoothly dim LED lighting fixtures that require an analogue control signal (1- 10V), such as the LPC-OT18 LED driver for the ICON family of LED downlights. To the end user, it looks, and operates exactly as a standard lighting dimming wall plate.

Specifications

Physical

		Units
Dimensions	72 x 117 x 45	mm
Protrudes into wall	14	mm
Weight	110	g

Inputs

		Units
Voltage	100 – 264	VAC
Frequency	47 – 63	Hz

Outputs

		Units
Outputs	1 – 10V Signal	
Output Fuse	100	mA

1800 950 888 37 Oxford St Bulimba, QLD 4171
1800 982 005 www.digilin.com.au

Manufactured In Australia for over 35 years

Installation

To install the PosiVolt first remove the knob by pulling it straight back from the plate, and removing the cover panel. Attaching to the wall is performed as per a normal panel. However, note that if using a mounting bracket to attach to a plasterboard wall, the bracket should be positioned on the opposite side to the wires connecting to the PosiVolt board, as shown in Figure 1. This will position the bracket on the right hand side of the hole.

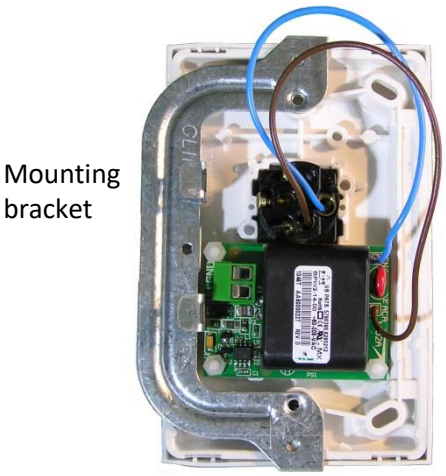

Figure 1 Position of Mounting bracket.

The PosiVolt module is wired in parallel to the load. The brown wire from the PosiVolt is connected to the switched active output of the mains switch. The blue wire is connected to the neutral line in the loop terminal.

The 1-10V output is taken from the green connector as shown in Figure 2 (polarity is also marked on the board as Vo and Gnd). Note that on the LED fitting or driver, GND may be marked either as GND, V- or some other logical derivative.

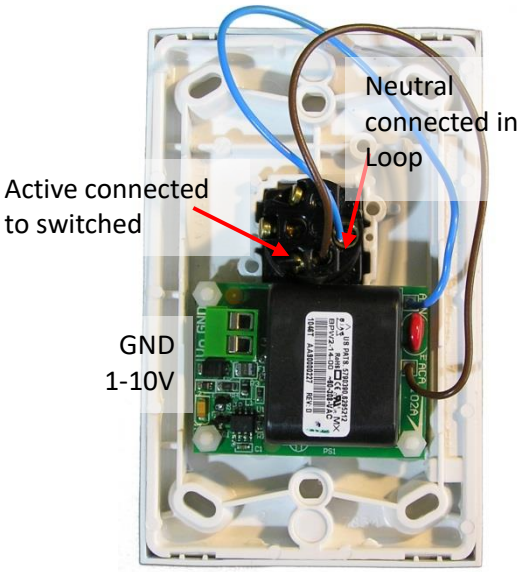

Figure 2 LACI wiring

Maximum Load

The maximum load of driver or fittings that can be dimmed via the PosiVolt is dependent on the specifications of the unit to be dimmed. This is because analogue dimming does not have a set specification for the current draw on the dimming line. The maximum load can be worked out as:

$$Maxload = \frac{100}{currentDraw}$$

where currentDraw is in mA.

Operation

The PosiVolt works as a standard dimmer. Switching the main switch on will turn on the LED fittings and the PosiVolt module. Rotating the dial will then increase or decrease the brightness.

1800 950 888 37 Oxford St Bulimba, QLD 4171
1800 982 005 www.digilin.com.au
Manufactured In Australia for over 35 years

Wiring Diagram

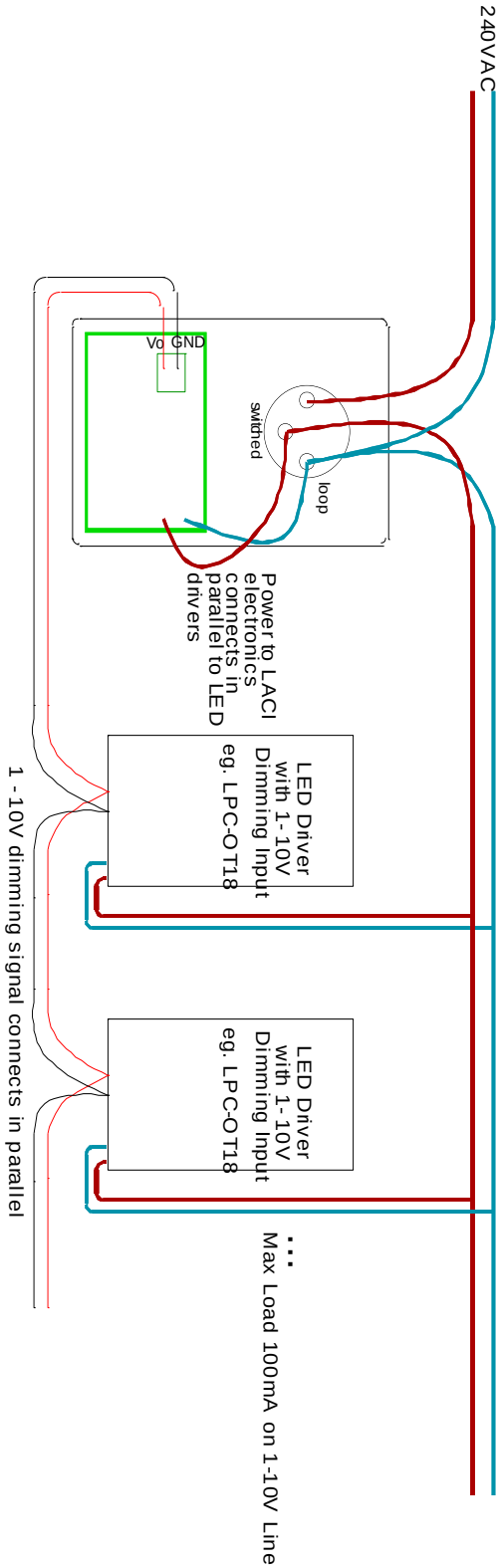

1800 950 888
37 Oxford St Bulimba, QLD 4171
1800 982 005
www.digilin.com.au

Manufactured In Australia for over 35 years