MissionLED
High Output Spot-Free LED Strip
Specifications & Installation Guide

LED Lighting and Control
Designed and Manufactured in Australia

©2016 Digilin Australia.
Document Rev: 5.2 - 7 November 2016
Product specifications are subject to change without notice.

DIGILIN

Table Of Contents

Safety Notes 2
Specifications 2
Inputs 2
Optical 2
Javelin Covers 3
Dimensions 3
Javelin Extrusion 3
Installation 4
Mounting 4
Mounting the Javelin Extrusion 4
Wiring 4
Maintenance 4

Safety Notes

- Do not press On LEDs when installing
- Installation should only be performed by a qualified professional
- Install in accordance with all appropriate wiring standards
- Never connect a LED fitting to a driver that is powered. Doing so may result in damage to the LED.
- Always make sure the output voltage range and output current of the LED driver match the requirements of the LED fitting. Failure to do so may result in damage both the driver and fitting.

Specifications

Inputs

			Units
Voltage	Nominal	24	VDC
	Min	23	
	Absolute Max	25	
Drive Current		1010	mA/m
Watts		24.24	W/m
Maximum run from power connection		4	m

Optical

			Units
Order Code	W30	W40	
Beam Angle	110		°
Colour Temp	3000	4000	K
CRI	80		
Typical Lumens	2400	2450	lm/m

1800 950 888 37 Oxford St Bulimba, QLD 4171
1800 982 005 www.digilin.com.au
Manufactured In Australia for over 35 years

Javelin Covers

Stock Code	Description	Effect
O	Opal Diffuser	Solid white cover to create the smoothest linear effect
F	Frosted Diffuser	Semi-transparent cover
C	Clear	Transparent Cover
C30	Clear 30° Linear Lens	Clear Lens focusing light at 30° along length axis
C60	Clear 60° Linear Lens	Clear Lens focusing light at 60° along length axis
C90	Clear 90° Linear Lens	Clear Lens focusing light at 90° along length axis
F30	Frosted 30° Linear Lens	Frosted Lens focusing light at 30° along length axis
F60	Frosted 60° Linear Lens	Frosted Lens focusing light at 60° along length axis
F90	Frosted 90° Linear Lens	Frosted Lens focusing light at 90° along length axis

Dimensions

All dimensions in mm

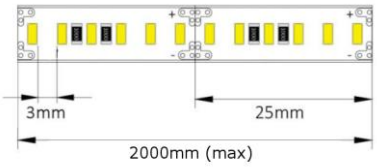

Maximum extrusion length is 2m

Javelin Extrusion

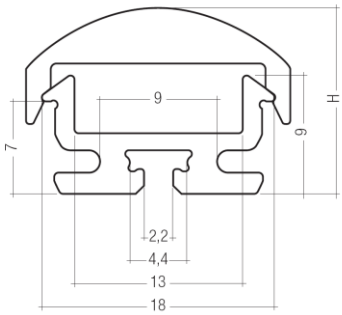

Javelin Extrusion (shown with Lens)

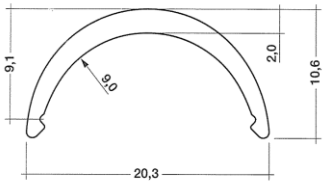

Javelin Cover/Diffuser

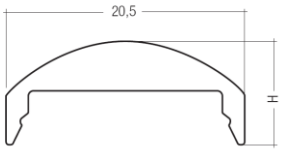

Lens	H
30°	11
60°	10
90°	9

Javelin Linear Lens

1800 950 888 37 Oxford St Bulimba, QLD 4171
1800 982 005 www.digilin.com.au

Manufactured In Australia for over 35 years

Installation

Mounting

- Do not install where water or high humidity may be present without further protection. Note that the Javelin extrusion is **NOT** sealed.
- Do not mount with the components or board touching any flammable surfaces.
- Do not install under mechanical stress
- Allow for expansion due to changes in temperature.
- Please be aware that while the system has a very long operational life, faults may still occur and provision needs to be made for maintenance.

Mounting the Javelin Extrusion

To mount the Javelin extrusion, simply screw the mounting clips to the surface, and then push the extrusion into the clips.
1 clip for every 0.5m of extrusion required. Minimum of 2 clips.

Wiring

- No continuous run of strips should exceed the specified maximum run value without additional power feeds.
- Only join strips powered by the same supply

Maintenance

- Strips normally require no maintenance except for cleaning
- Isolate from power before accessing
- Visually inspect strips at the time for any obvious faults
- The strips may be dusted with a non-conductive brush. No fluids should be used
- If this procedure does not remove contaminants, please contact Digilin for further advice.

1800 950 888 37 Oxford St Bulimba, QLD 4171
1800 982 005 www.digilin.com.au
Manufactured In Australia for over 35 years